Two separate room power sequencers in one panel

using the

LynTec Modular Sequencing System

Model used: **MSLC 326-36** with extra **SS-2 S**witch **S**et.

Two separate sound systems. Main room has 26 circuits. Room 2 has 10 circuits.

Main Room gets 2 extra circuits by using auxiliary controlled circuits on Room 2's sequencer board.

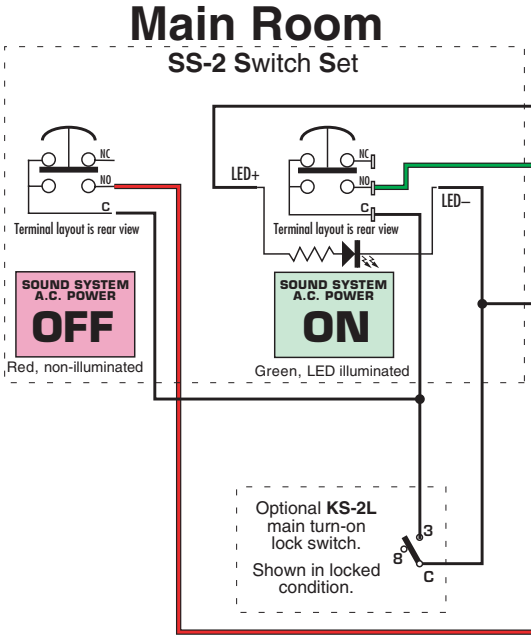

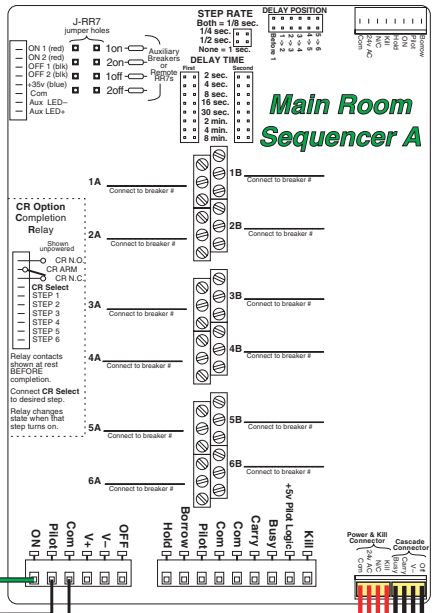

Add 0Ω jumpers to provide sequencer control to an external device.

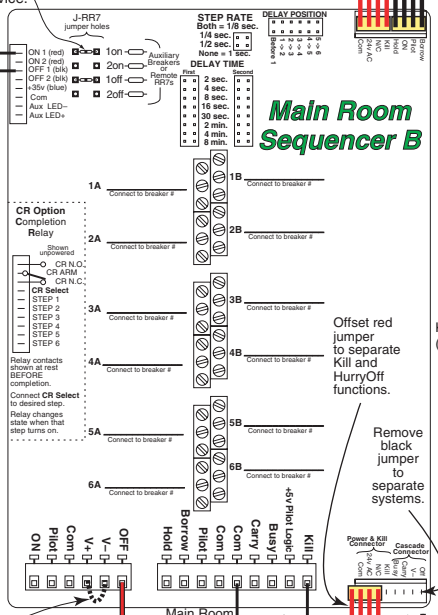

To any Common

All KILL (fire)

Offset red jumper to separate Kill and HurryOff functions.

Remove black jumper to separate systems.

Main Room Emergency Kill

CR1 1N4002

How to get 2 or even 4 more circuits by using Aux function

Question I need 26 circuits from two MS-12 boards, can I double connect two sets of breakers to one step?

Answer Not safely. The relay and its power supply will be overloaded, shortening the relay life and compromising operation at low line voltage.

But there is a way. If there is another board in the system that is not fully utilized, you can add 2 or 4 circuits by using the auxiliary breaker function. By disconnecting the Step 1 or 2 drive resistors (100Ω) the first 2 control relays will be isolated from that board's sequencer. They may then be driven by another board's Step 1 and 2 RR7 relay drive capability. Only step one is shown auxiliary connected for clarity.

100Ω sequencer relay-control resistors.
Lift one end to disable sequencer control.
In this case step 1 control comes from Main Room B, Step 1.

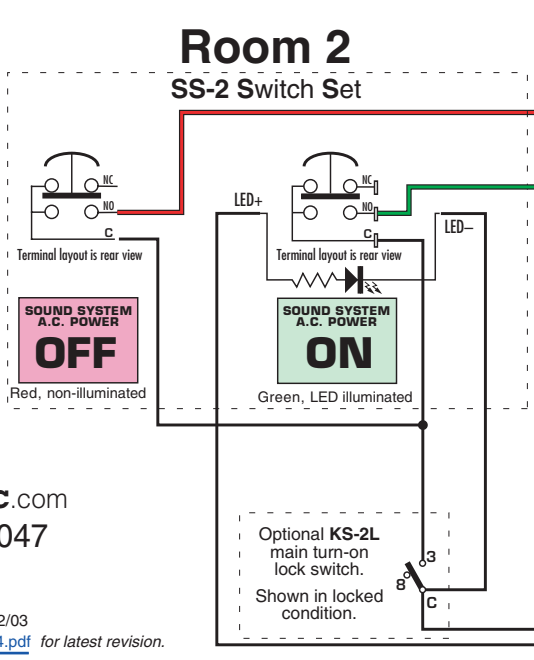

Connect V+ to V– on the ***last*** sequencer in each system if Power Vouchers™ are not used.

Makes the ON LED stay lit at end of on sequence.

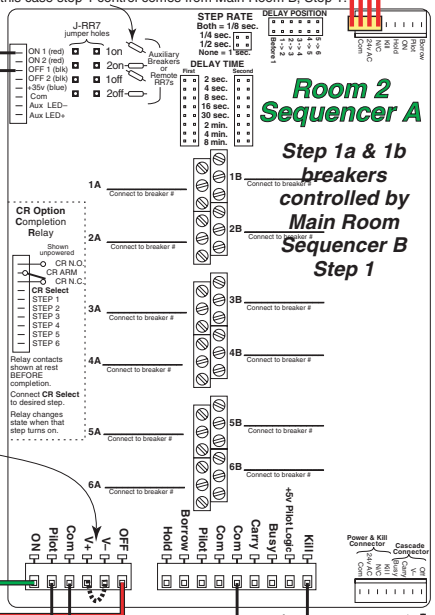

Step 1a & 1b breakers controlled by Main Room Sequencer B Step 1

Room 2 Emergency Kill

CR2 1N4002

www.LynTec.com
800-724-4047

139-0304-03 Extra 2 or 4 Circuits 7/2/03
See http://www.lyntec.com/139-0304.pdf *for latest revision.*